IM250S Impulse 14/16 Gauge
Straight Finish Nailer
Part No. B20574 / 902000A

IM250S IMPULSE 14/16 GAUGE STRAIGHT FINISH NAILER

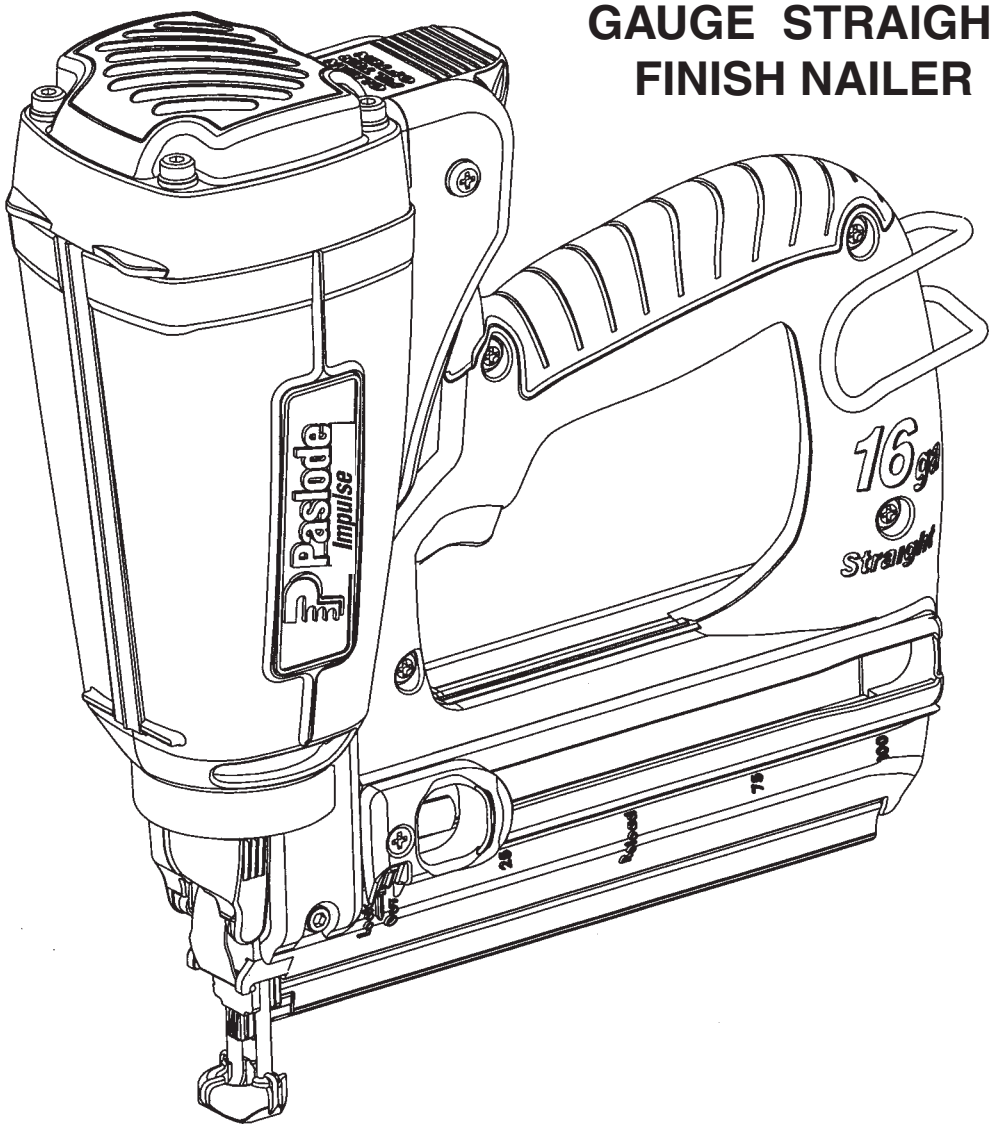

IMPORTANT!
DO NOT DESTROY

Always refer to operating manual #902017 for detailed information on this tool. It is the customer's responsibility to have all operators and service personnel read and understand this information.

TOOL SCHEMATIC AND PARTS

www.paslode.com

IM250S Impulse 14/16 ga.
Straight Finish Nailer
B20574 / 902000A

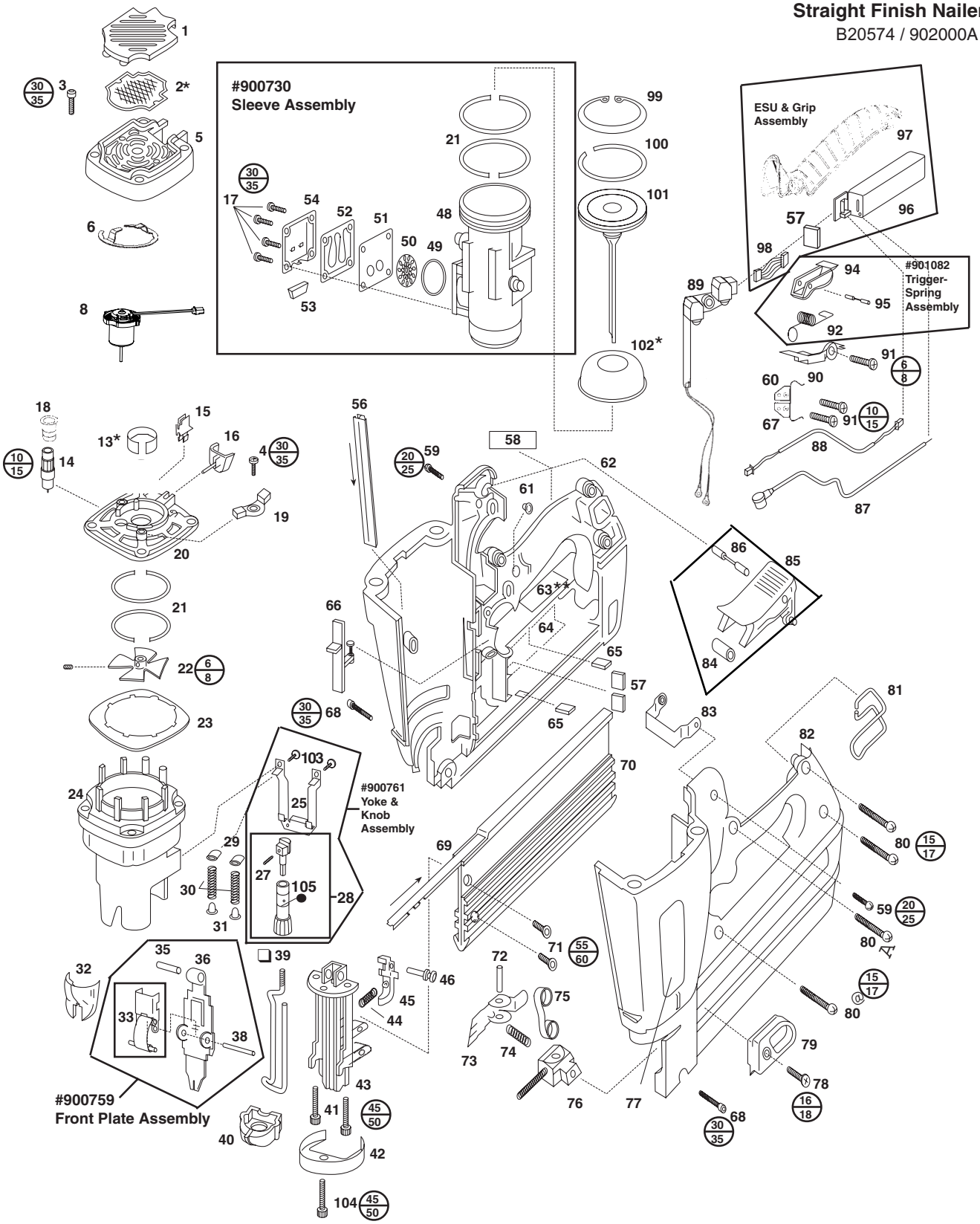

* Denotes Normal Wear Items
** Make sure Warning Label (900496) is properly affixed replace if necessary. Label is available at no charge through the Service Dept.
❑ Apply Grease Part No. 900767 to threads.

TORQUE VALUES

MIN / MAX IN/LBS

PARTS LEGEND

IM250S Impulse 14/16 ga. Straight Finish Nailer, B20574 / 902000A

1	900640	1	Grill
*2	900648	1	Filter
3	901064	4	Shoulder Screw 8-32 x 1-3/8”
4	900596	1	Screw, Sems 8-32 x 7/16”
> 5	902012	1	Cap & Grill
6	901119	1	Retaining Ring
8	901382	1	Fan Motor Assembly with ring
*13	401356	1	Motor Sleeve
14	900714	1	Spark Plug Assembly
15	900674	1	Wire Clip
16	900697	1	Stem Adapter
17	405140	4	Screw 8-32 x 3/8”
18	900785	1	Insulator
19	900739	1	Cylinder Head Circuit Board Assembly
20	900605	1	Cylinder Head
21	900612	4	Seal Ring
22	900709	1	Fan Assembly
23	900700	1	Air Dam
24	900729	1	Combustion Chamber Assembly
25	900704	1	Yoke
27	900734	1	Roll Pin
28	900727	1	Knob w/ Yoke Guide Assembly
29	900707	2	Probe Bumper
30	900671	2	Spring, Combustion Chamber
31	900706	2	Spring Guide
32	900688	1	Latch Cover Quick Clear
33	900786	1	Quick Clear Lever Assembly
35	900619	1	Dowel Pin
36	900684	1	Front Plate
38	900685	1	Latch Cover Pin
❑ 39	900686	1	Probe
40	900702	1	Probe Tip
41	900708	2	S.H.C.S. 8-32 x 1/2” (red)
42	900692	1	Retaining Cup
43	902027	1	Nose
44	900631	1	Spring
45	900602	1	Lockout Bar
46	900630	1	Lockout Pin
48	900730	1	Sleeve Assembly
49	900616	1	O-Ring
50	901089	1	Exhaust Baffle
51	900665	1	Reed Plate
52	900664	1	Reed Valve
53	900609	1	Muffler
54	900668	1	Muffler Cover
56	900620	1	Front Channel Extrusion
57	401450	3	Battery Pad
58	902028	1	Nameplate
59	900598	2	Sems Screw 10-32 x 5/16”
60	900312	1	Contact, Positive
61	404385	1	Light Pipe
62	902005	1	Handle, Rightside
**63	900496	1	Warning Label
64	900508	1	International Label
65	404922	2	Battery Contact Pad
66	900726	1	Slide Switch Assembly
67	900311	1	Contact, Negative
68	900792	2	Shoulder Screw 8-32 x 15/32”
69	902007	1	Brad Channel
70	902033	1	Magazine Extrusion
▲71	900660	2	Screw 10-32 x 3/8”(red)
72	900722	1	Follower Pin
73	902002	1	Follower
74	900691	1	Compression Spring
75	900627	1	Negator Spring
76	900720	1	Follower Core
77	900651	2	Housing Label
78	900724	1	Screw Plastite 8-16 x 5/8”
79	902008	1	Follower Body
80	901066	4	Screw Plastite 8-16 x 3/4”
81	900289	1	Belt Hook
82	902006	1	Handle, Leftside
83	900703	1	Handle Bracket
84	900755	1	Bushing Actuator
85	900788	1	Actuator Assy
86	404433	1	Pin Actuator
87	900765	1	Spark Plug Wire Assembly
88	900663	1	Fan Wire Assembly
89	901050	1	Molded Circuit Assembly
90	900629	1	High Tension Clip
91	404702	3	Screw 6-32 x 3/8”
92	901053	1	Trigger Spring
94	901045	1	Trigger with Pad
95	901047	1	Trigger Pin
96	900672	1	Electronic Spark Unit
97	901044	1	Soft Grip
98	900662	1	ESU Power Wire Assembly
99	403099	1	Retaining Ring
100	403098	1	Piston Ring
*101	900728	1	Piston Assembly
*102	900680	1	Piston Bumper
103	900746	2	Screw 8-32 x 7/16”
104	900754	1	Screw 8-32 x 1/2” (yellow)
105	900645	1	Ball, knob

.

* Denotes Normal Wear Items

** Make sure Warning Label (900496) is properly affixed replace if necessary. Label is available at no charge through the Service Dept.

❑ Apply Grease Part No. 900767 to threads.

▲ Apply Loctite 277 (red)

> Denotes New Change

SAFETY INSTRUCTIONS

WEAR EYE AND HEARING PROTECTION

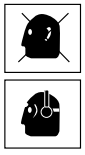

Always wear hearing protection and eye protection devices, including side shields when operating or working in the vicinity of a tool.

ACCESSORIES

Car Adapter

Enables you to re-charge your battery
with your vehicle's electrical system.

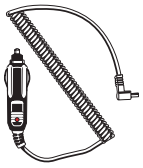

Part No. B20544H

Battery

Part No. B20544E

Battery Charger Kit

(Replacement Charger Base Only Part No. B20544D)
(Replacement Transformer Only Part No. B20544C Australia)

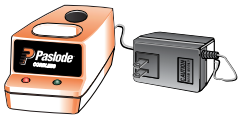

Part No. B20544B

No-Mar Tip - 3 Pk.

Contains 3 of #900702 tips conveniently packaged in a reusable plastic box.

Part No. B20544N

Clear Safety Glasses

Part No. 402510

Tinted Safety Glasses

Part No. 402512

Degreaser Cleaner

Ideal cleaner for all Paslode® tools.

Part No. B20544L

Paslode Impulse Lubricating Oil

Part No. B20544F

Carrying Case

Part No. 900751

Short Brad Guide Used For 15-32MM

Part No. 013720

Paslode®
An Illinois Tool Works Company
888 Forest Edge Drive
Vernon Hills, Illinois 60061
www.paslode.com

Printed in U.S.A
© 2006, Illinois Tool Works, Inc.

902032-1
08-08-2009